PROFESSIONAL LAUNDRY

Tumble dryer

D7–550

Features and benefits

- Axial airflow and tight construction gives low energy consumption
- High productivity – 2 full loads per hour
- Large door opening for easy loading and unloading
- Easy and ergonomic access to the lint screen
- Excellent water evaporation efficiency per kWh
- The coin version with Ecopower to avoid over drying of the garments and get a lower energy consumption
- With Intelligent control:
  - Large and clear display for easy program selection
  - Easy access with user-friendly interface
  - Language selection
  - Drying program packages optimized for Economy, Care and Time
  - Service program for adjustment of parameters
  - USB connection

Other options

- Stainless steel front and drum
- Residual Moisture Control - RMC
- Connection to booking- /payment- system or coin meter
- Reversing drum
- Emergency stop button
- Supply disconnector

Accessories

- Fresh air intake
- Exhaust on top (not available on steam heated tumble dryers)
- High altitude kit for gas heated tumble dryers (>610 m)

Images shown are a representation of the product only and variations may occur.

Main specifications		D7–550			
Rated capacity, filling factor 1:18	kg / lb	30.5 / 67.2			
Rated capacity, filling factor 1:22	kg / lb	25 / 55.1			
Drum, volume	litre	550			
Drum, diameter	ø mm	913			
Heating alternatives:					
El	kW	18.0[2] / 24.0[2] / 32.0			
Gas	kW / BTU/h	33 / 112700			
Steam at 600-700 kPa	kW	36.0			
Consumption data[1]		El 24.0 kW[2]	El 32.0 kW	Gas	Steam
Total time	Min	31	23	24	23
Energy consumption	kWh	12.29	12.19	13.27	15.24
Evaporation	g/min	409	543	512	550
Energy water evaporation	kWh/l	0.98	0.98	1.06	1.22

1. At rated capacity 1:22, 100% cotton load at 50% initial moisture dried to 0%.
2. Special requirement on request.

Produced according to ISO 9001 and ISO 14001.
Certified with CB certificate for Low Voltage Directive and S-mark according to the Machinery Directive. Protection class IP X4D.

Electrical connections					
Heating alternative	Main voltage	Hz	Heating power kW	Total power kW	Recom-mended fuse A
Electric heated	220-230V 3~	50/60	18.0/24.0/32.0	19.5/25.5/33.5	50/80/100
	240V 3~	50/60	18.0/24.0/32.0	19.5/25.5/33.5	50/63/100
	380-415V 3N/3~	50/60	18.0/24.0/32.0	19.5/25.5/33.5	32/50/50
	440V 3~	60	24.0/32.0	26.7/34.7	35/50
	480V 3~	60	24.0/32.0	26.7/34.7	32/50
Gas heated/Steam heated	220–240V 1/1N~	50/60	[1]	1.8	10
	220-480V 3/3N~	50/60	[1]	1.5	10

1. Total power and recommended fuse does not depend on the heating power in those cases.

Steam, gas and air connections[1]		D7–550
Steam	ISO 7/1-R	1”
Steam pressure	kPa	100-1000
Steam consumption	kg/h	65
Condensate	ISO 7/1-R	1”
Gas	ISO 7/1-R	1/2”
Gas pressure, Natural gas	Pa mbar	2000 20
Gas pressure, Propane	Pa mbar	2800-3700 28-37
Air outlet	ø mm	200
Maximum air flow, Electric 50 Hz / 60 Hz	m^3/h	940 / 940
Maximum air flow, Gas 50 Hz / 60 Hz	m^3/h	940 / 940
Maximum air flow, Steam 50 Hz / 60 Hz	m^3/h	1080 / 1080
Maximum static back pressure, Electric 50 Hz / 60 Hz	Pa	480 / 950
Maximum static back pressure, Gas 50 Hz / 60 Hz	Pa	420 / 900
Maximum static back pressure, Steam 50 Hz / 60 Hz	Pa	1300 / 1550
Sound levels		
Sound power/pressure level at drying[2]	dB(A)	74/57
Heat emission		
% of installed power, max		15
Shipping data[3]		
Weight	net, kg	280
Shipping volume	m^3	2.80

1. Operating panel
2. Door opening, ø 810 mm
3. Electrical connection
4. Gas connection
5. Exhaust connection
6. Condensate connection
7. Steam connection
8. Lint screen
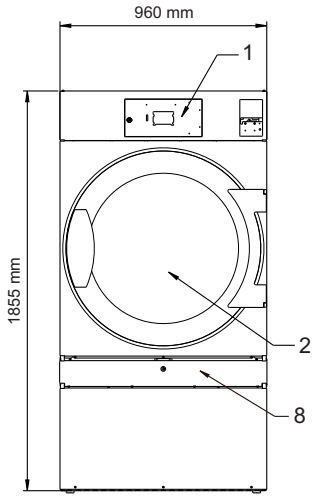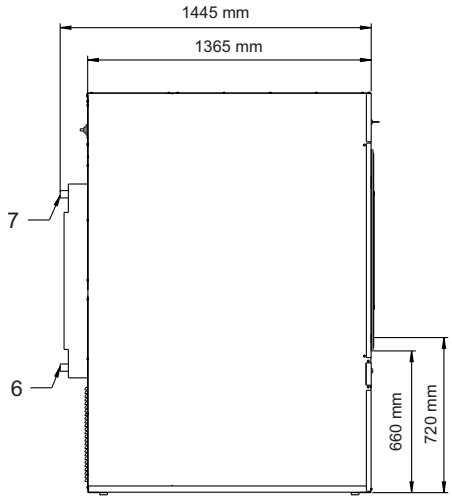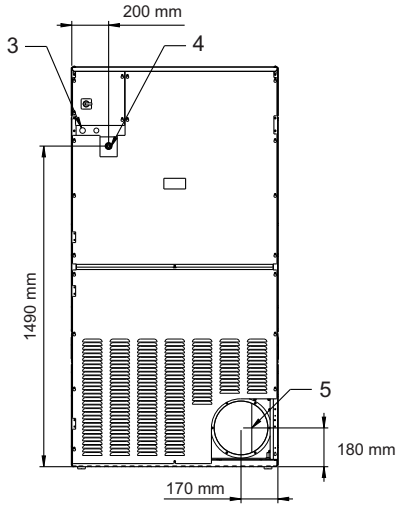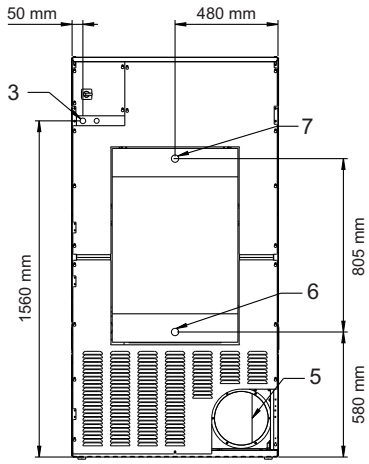
1. The default gas appliances are built to run on either GNH or LPG gas where shall be installed at not over than 610 m (2001 ft) high altitude otherwise a kit for high altitude must be installed to the machine. For the kit No. please refer to the spare parts list.
2. Sound power levels measured according to ISO 60704.
3. Average data. Crated weight/shipping volume depends on configuration. Please contact logistics for exact measures.