PROFESSIONAL LAUNDRY

Tumble dryer

D7–300S

Features and benefits

- High productivity – 2 full loads per hour per pocket
- Low energy consumption for optimal efficiency and economy
- Selection of temperature and time for easy operation
- Large door opening for easy loading and unloading
- Easy access to vital parts from front and rear for simple servicing
- The coin version with Ecopower to avoid over drying of the garments and get a lower energy consumption
- With Intelligent control:
  - Large and clear display for easy program selection
  - Easy access with user-friendly interface
  - Language selection
  - Service program for adjustment of parameters
  - USB connection

Other options

- Stainless steel front and drum
- Residual Moisture Control - RMC
- Reversing drum
- Payment: coinmeter with Ecopower, chipcard reader, central payment connection
- High altitude kit for gas heated tumble dryers (>610 m)

Images shown are a representation of the product only and variations may occur.

Main specifications[1]		D7–300S			
Rated capacity, filling factor 1:18	kg / lb	16.7 / 37			
Rated capacity, filling factor 1:22	kg / lb	13.6 / 30			
Drum, volume	litre	300			
Drum, diameter	ø mm	760			
Heating alternatives:					
Gas	kW / BTU/h	21 / 71700			
El	kW	9.0 / 13.5 / 18.0			
Consumption data[2]		Gas	El 9.0 kW	El 13.5 kW	El 18.0 kW
Total time	Min	21	43	29	24
Energy consumption	kWh	7.11	6.65	6.51	6.51
Evaporation	g/min	329	160	231	279
Energy water evaporation	kWh/l	1.03	0.96	0.97	0.97

1. Value per pocket.
2. At rated capacity 1:22, 100% cotton load at 50% initial moisture dried to 0%.

Produced according to ISO 9001 and ISO 14001.
Certified with CB certificate for Low Voltage Directive and S-mark according to the Machinery Directive. Protection class IP X4D.

Electrical connections					
Heating alternative	Main voltage	Hz	Heating power kW	Total power kW	Recom-mended fuse A
Electric heated[1]	220-240V 3~	50/60	9.0	10.0	25
	380-415V 3N/3~	50/60	9.0/13.5/18.0	10.0/14.5/ 19.0	16/25/32
	440V 3~	60	9.0/13.5/18.0	10.0/14.5/ 19.0	16/20/25
	480V 3~	60	9.0/13.5/18.0	10.0/14.5/ 19.0	16/20/25
Gas heated[1]	220-480V 1/1N/3/ 3N~	50/60	[3]	1.0	10
Gas heated[2]	220-480V 1/1N/3/ 3N~	50/60	[3]	2.0	10

1. Per pocket.
2. Complete machine.
3. Total power and recommended fuse does not depend on the heating power in those cases.

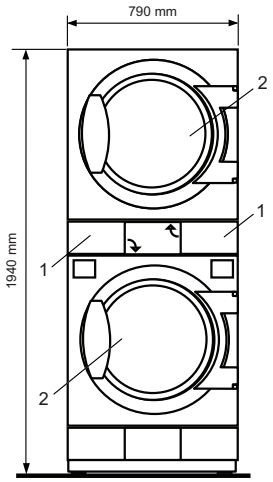

Gas and air connections[1]		D7–300S
Gas	ISO 7/1–R1	1/2”
Gas pressure, Natural gas	Pa mbar	2000 20
Gas pressure, Propane	Pa mbar	2800-5000 28-50
Air outlet	ø mm	200
Evacuated air, gas/el	m^3/h	600 / 600
Pressure drop, gas/el	Max. Pa	400 / 400
Sound levels		
Sound power/pressure level at drying[2]	dB(A)	76/60
Heat emission		
% of installed power, max		15
Shipping data[3]		
Weight	net, kg	289
Shipping volume	m^3	2.03

1. Operating panel
2. Door opening, ø 580 mm
3. Electrical connection
4. Gas connection
5. Exhaust connection
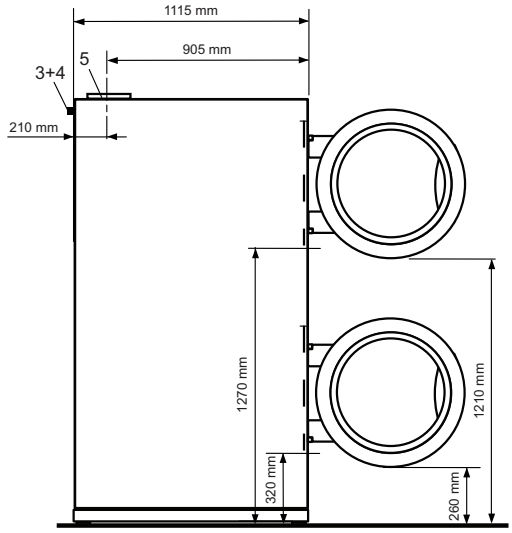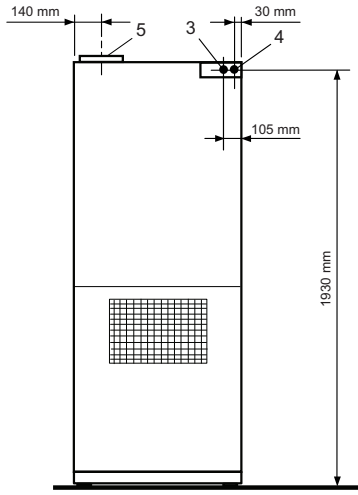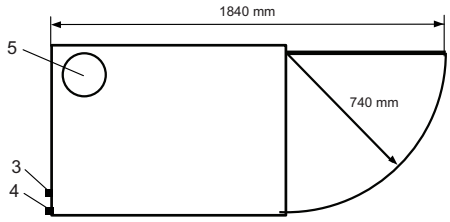
1. The default gas appliances are built to run on either GNH or LPG gas where shall be installed at not over than 610 m (2001 ft) high altitude otherwise a kit for high altitude must be installed to the machine. For the kit No. please refer to the spare parts list.
2. Sound power levels measured according to ISO 60704.
3. Average data. Crated weight/shipping volume depends on configuration. Please contact logistics for exact measures.